southco

PROPRIETARY ITEM - EXCEPT FOR USES EXPRESSLY GRANTED IN WRITING INFORMATION DISCLOSED HEREON IS CONFIDENTIAL AND ALL RIGHTS PATENT AND OTHERWISE ARE RESERVED BY SOUTHCO, INC.

No B7 SLIDE LATCH ASSEMBLY

DATE	DRAWN	CHKD	SCALE	DRAWING NUMBER
2-8-77	ACZ		1 : 1	J-B7-10-301-10

REV.	DATE	DRAWN	REVISION
E	18DEC2001	JPW/JSS	PRN: P2001-0337

ITEM	COMPONENT	PART No	MATERIAL	FINISH
ASSEMBLY		B7-10-301-10	—	—
	SLIDE	—	NYLON	BLACK
	HOUSING	—	1010 STEEL	SEE NOTE "A"
	SPRING	—	302 STAINLESS STEEL	PASSIVATED
	STUD	—	LOW CARBON STEEL	SEE NOTE "B"
	WASHER	—	ACETAL	BLACK

INCH DIMENSIONS

DIMENSIONS WITHOUT TOLERANCES ARE FOR REFERENCE ONLY.

THIRD ANGLE PROJECTION

A4 PAPER SIZE

INSTALLATION INSTRUCTIONS:

A. PREPARE PANEL AS SHOWN. NOTE MAX FRAME AND PANEL THICKNESSES.
B. ATTACH FASTENER TO PANEL USING FOUR ø.18 RIVETS OR No. 10 SCREWS. ALTERNATIVE: WELD HOUSING IN PLACE.

NOTES:

A. BLACK POWDER COATING
B. ZINC PLATE, CHROMATE PLUS SEALER

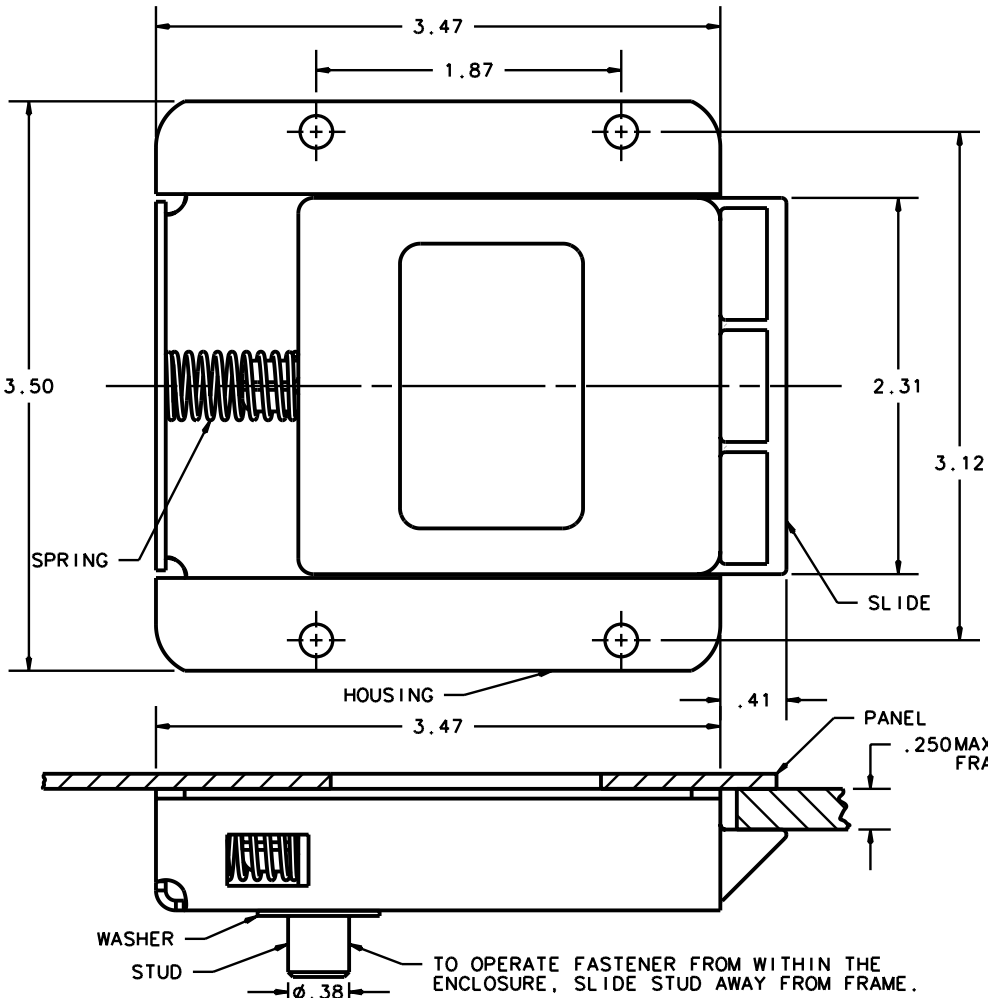

PANEL PREPARATION
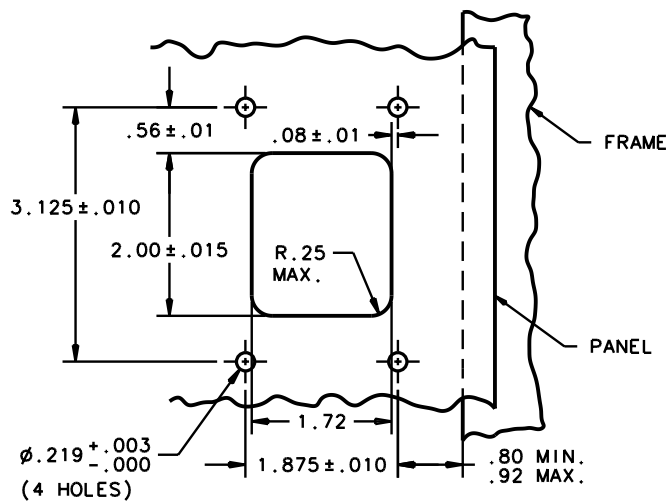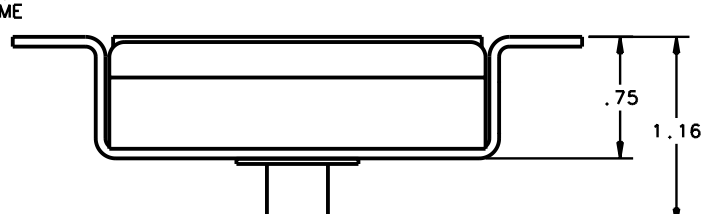
SCALE .5 : 1