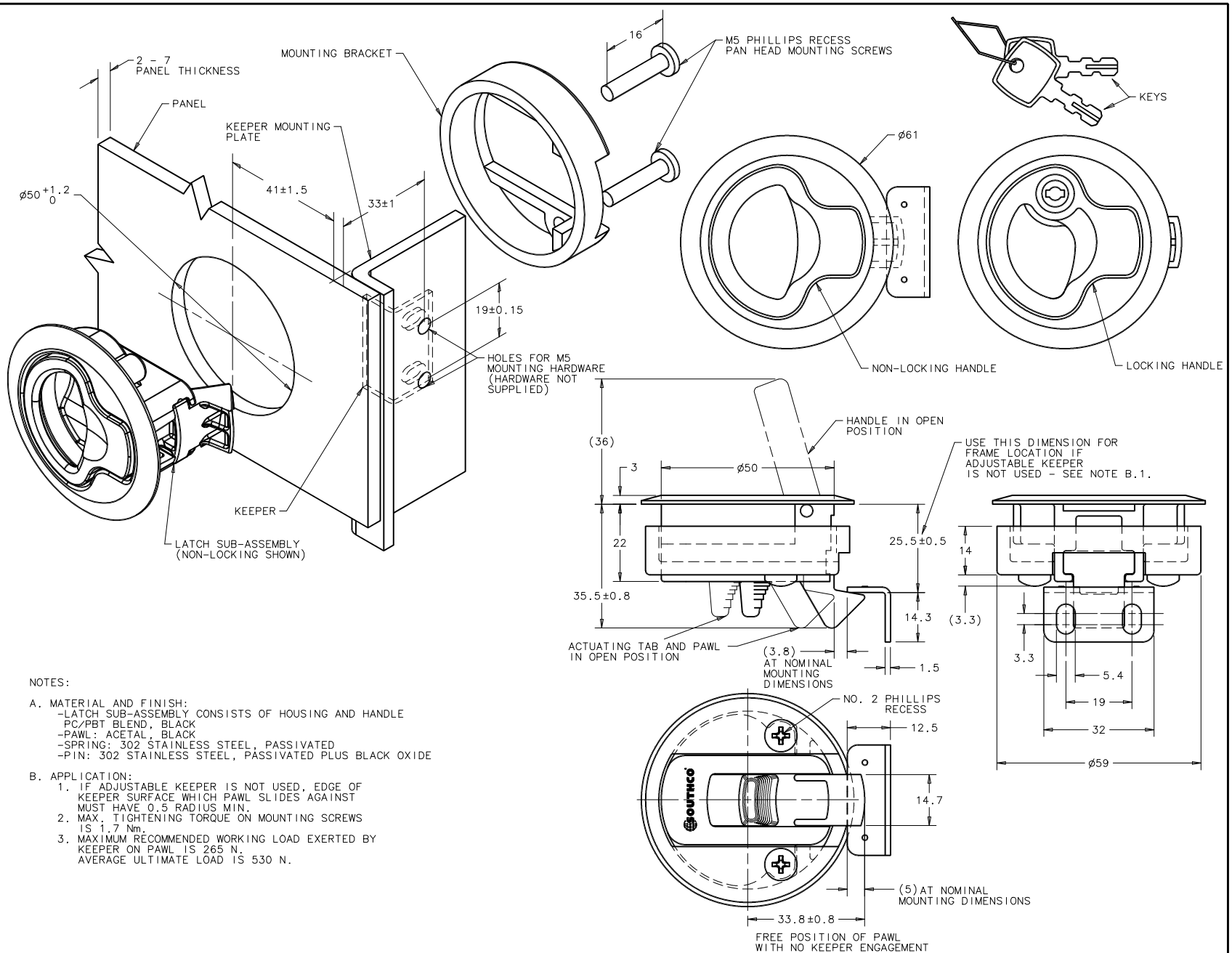


NOTES:

A. MATERIAL AND FINISH:
- LATCH SUB-ASSEMBLY CONSISTS OF HOUSING AND HANDLE PC/PBT BLEND, BLACK
- PAWL: ACETAL, BLACK
- SPRING: 302 STAINLESS STEEL, PASSIVATED
- PIN: 302 STAINLESS STEEL, PASSIVATED PLUS BLACK OXIDE

B. APPLICATION:
1. IF ADJUSTABLE KEEPER IS NOT USED, EDGE OF KEEPER SURFACE WHICH PAWL SLIDES AGAINST MUST HAVE 0.5 RADIUS MIN.
2. MAX. TIGHTENING TORQUE ON MOUNTING SCREWS IS 1.7 Nm.
3. MAXIMUM RECOMMENDED WORKING LOAD EXERTED BY KEEPER ON PAWL IS 265 N. AVERAGE ULTIMATE LOAD IS 530 N.

| ITEM | PART NUMBER | MATERIAL | FINISH | REMARKS |
|---|---|---|---|---|
| ASSEMBLY | M1-41 | | | LOCKABLE |
| ASSEMBLY | M1-61 | | | NON-LOCKABLE |
| LATCH SUBASSEMBLY | | SEE NOTE A | SEE NOTE A | |
| MOUNTING BRACKET | | PC/PBT BLEND | BLACK | |
| KEEPER | | 304 STAINLESS STEEL | PASSIVATED | |
| MOUNTING SCREWS (2) | | 300 SERIES STAINLESS STEEL | PASSIVATED | |

| REV | DATE | DRAWN/CHKD | DESCRIPTION |
|---|---|---|---|
| G | 21JAN2002 | RJB/VNI | PRN:P2002-0017 |
| H | 06DEC2002 | RLR/DLH | PRN:P2002-0935 |
| I | 17APR2004 | MDY/AJH | PRN:P2004-0402 |

southco

PROPRIETARY ITEM - EXCEPT FOR USES EXPRESSLY GRANTED IN WRITING, INFORMATION DISCLOSED HEREON IS CONFIDENTIAL AND ALL RIGHTS PATENT AND OTHERWISE ARE RESERVED BY SOUTHCO, INC.

# SOUTHCO FLUSH-PULL LATCH METRIC ASSEMBLY

| DATE | DRAWN | CHKD | SCALE |
|---|---|---|---|
| 31AUG92 | JGK | | 1:1 |

DRAWING NUMBER: J-M1-61

MILLIMETERS

DIMENSIONAL TOLERANCE UNLESS OTHERWISE NOTED ±0.25

THIRD ANGLE PROJECTION

A3 PAPER SIZE