DRAWING NUMBER J-E3-14XX

MILLIMETERS

TOLERANCES UNLESS OTHERWISE NOTED
ALL DIMENSIONS WITHOUT TOLERANCES ARE FOR REFERENCE ONLY.

A3 PAPER SIZE

THIRD ANGLE PROJECTION

| SCALE | CHKD | DRAWN | DATE |
|---|---|---|---|
| 1:1 | | NRW | 09SEP1998 |

STANDARD FLUSH VISE-ACTION LATCH

PROPRIETARY ITEM - EXCEPT FOR USES EXPRESSLY GRANTED IN WRITING INFORMATION DISCLOSED HEREON IS CONFIDENTIAL AND ALL RIGHTS PATENT AND OTHERWISE ARE RESERVED BY SOUTHCO, INC.

southco®

| REV | DATE | DRAWN/CHKD | DESCRIPTION |
|---|---|---|---|
| A | 10OCT2011 | MJS/MGG | PRN: P2011-1243 |
| B | 02NOV2011 | MJS/MGG | PRN: P2011-1405 |

# PART NUMBER: E3-YYVV-WWX

VV = HEAD STYLE (SEE TABLE A)
WW = PAWL STYLE (SEE TABLE B)
X = FINISH (SEE TABLE C)
YY = ROTATION TYPE
14 = CW ROTATION
21 - CCW ROTATION

TABLE A

| VV (HEAD STYLE) | HEAD STYLE |
|---|---|
| 3 | M4 TRIANGLE |
| 4 | 7mm SQUARE |
| 6 | 8mm HEX SOCKET |
| 10 | 8mm SQUARE |
| 11 | 8mm RAILWAY DRIVER |
| 18 | 10mm HEX |
| 20 | 8mm TRIANGLE |

TABLE B

| WW (PAWL NUMBER) | GRIP(mm) | WW (PAWL NUMBER) | GRIP(mm) |
|---|---|---|---|
| 00 | 19 | 12 | 43 |
| 01 | 21 | 13 | 45 |
| 02 | 23 | 14 | 47 |
| 03 | 25 | 15 | 49 |
| 04 | 27 | 16 | 51 |
| 05 | 29 | 17 | 53 |
| 06 | 31 | 18 | 55 |
| 07 | 33 | 19 | 57 |
| 08 | 35 | | |
| 09 | 37 | | |
| 10 | 39 | | |
| 11 | 41 | | |

TABLE C

| X (FINISH NUMBER) | FINISH |
|---|---|
| 1 | BRIGHT CHROME PLATE |
| 5 | BLACK POLYESTER POWDER |
| 7 | SATIN SILVER POLY. POWDER |

MATERIAL AND FINISH

| COMPONENT | MATERIAL | FINISH |
|---|---|---|
| HOUSING | DIE CAST ZINC | SEE TABLE C |
| CAP | DIE CAST ZINC | SEE TABLE C |
| RETAINER | 302 STAINLESS STEEL | NATURAL |
| SPRING | 302 STAINLESS STEEL | NATURAL |
| O-RING | BUNA-N | NATURAL |
| SLEEVE | 1075 STEEL | ZINC IMMERSION COATING |
| CAM | 1075 STEEL | ZINC IMMERSION COATING |
| SHAFT | LOW CARBON STEEL | ZINC PLATE, TRIVALENT CHROMATE PLUS SEALER |
| PIN | 1008 STEEL | ZINC PLATE PLUS CHROMATE DIP, YELLOW |
| RETAINER WASHER | 1010 STEEL | ZINC PLATE, TRIVALENT CHROMATE PLUS SEALER |
| RETAINER NUT | 1010 STEEL | ZINC PLATE, TRIVALENT CHROMATE PLUS SEALER |
| M6 SCREW | 1020 STEEL | ZINC PLATE, TRIVALENT CHROMATE PLUS SEALER |
| PAWL | 1010 STEEL | ZINC PLATE, TRIVALENT CHROMATE PLUS SEALER |

NOTE: DEPENDING ON THE PANEL THICKNESS THERE MAY BE SOME INTERFERENCE BETWEEN RETAINER NUT/SCREWS AND PAWL. ALWAYS CHECK INTERFERENCE. PAWL NUMBERS FOR REF. ONLY. PAWL SHOWN FOR GUIDANCE ONLY.

OPERATION: 195° TURN OF KEY CAUSES PAWL TO ROTATE 75° THEN PULL UP 6.4 MM. RETAINERS, WASHERS, NUTS AND PAWL SHIPPED SEPARATELY, BULK.

CAUTION: SET PAWL SO THAT NO MORE THAN 6Nm TORQUE IS APPLIED TO CAP TO CLOSE LATCH.

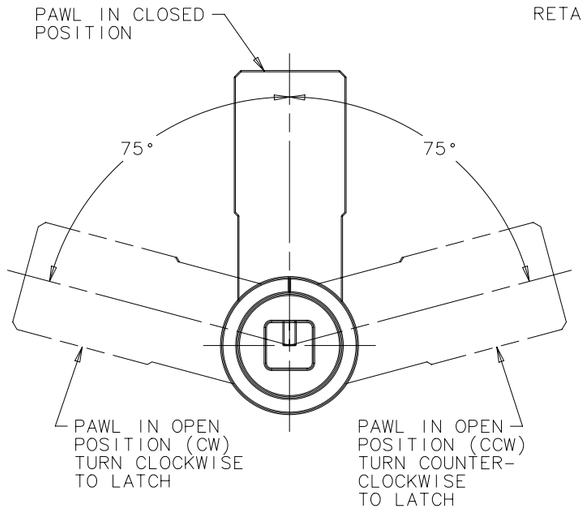


PAWL POSITION IN CLOSED AND OPENED POSITIONS

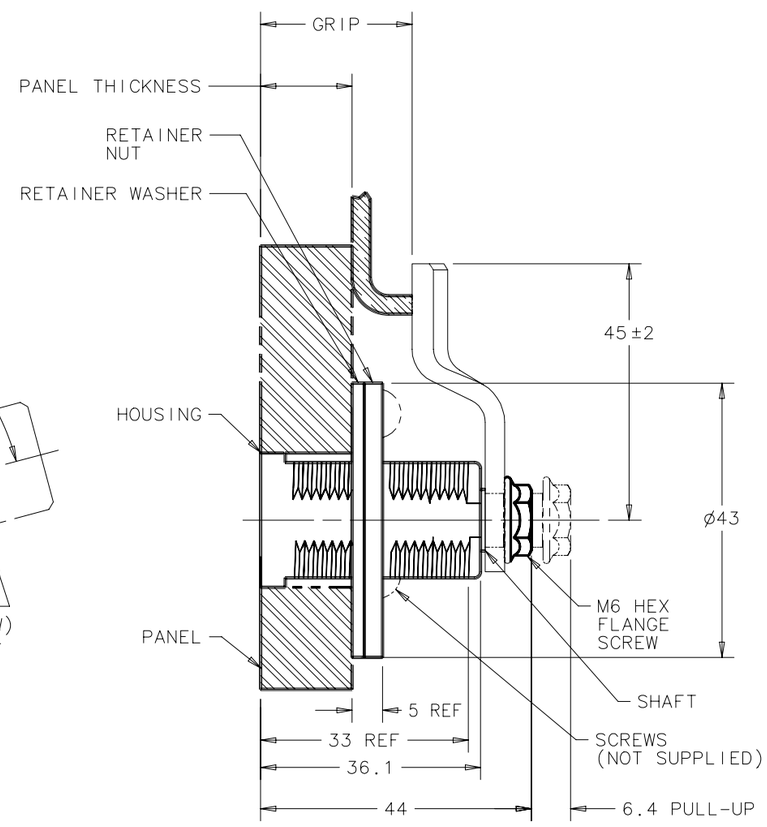


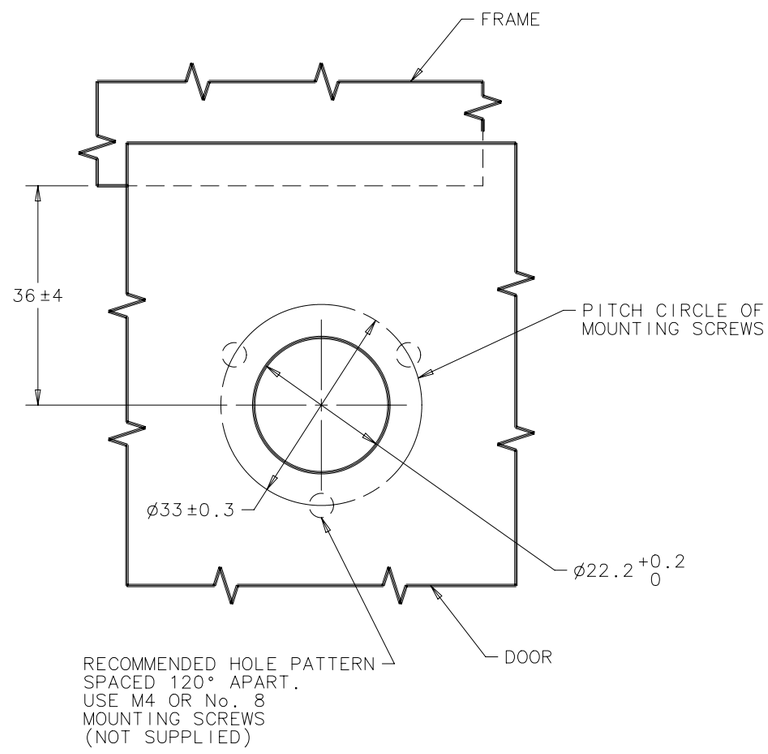


DOOR PREPARATION